Aug.1.2022 Copyright 2022 HIROSE ELECTRIC CO., LTD. All Rights Reserved.
In case of consideration for using Automotive equipment / device which demand high reliability, kindly contact our sales window correspondents.

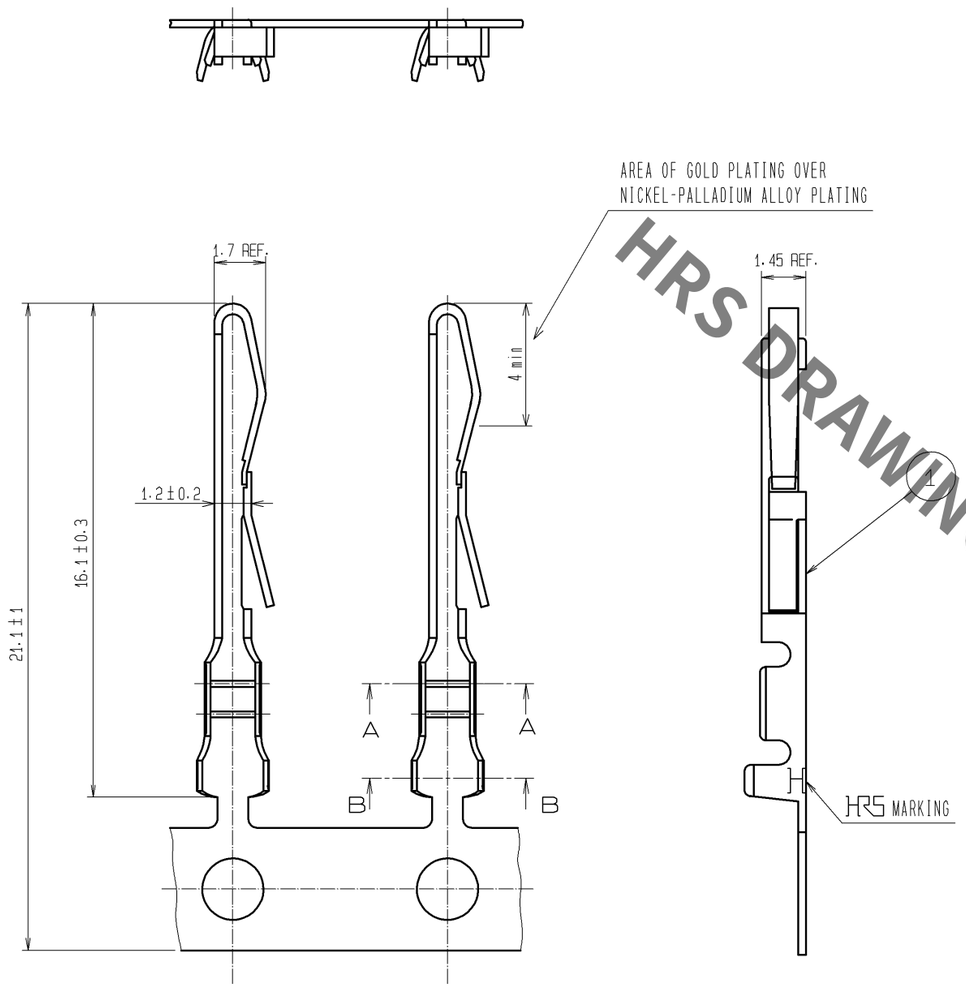

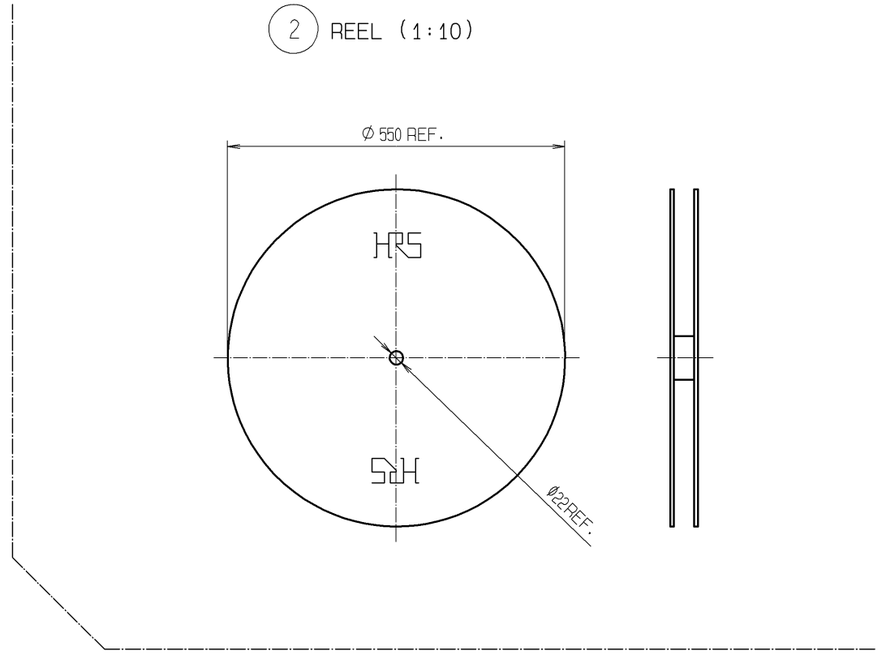

HRS DRAWING FOR REFERENCE

NOTES
1. APPLICABLE WIRE SIZE : AWG #24 TO #28, UL1007
2. PER REEL : 8,000 CONTACTS
3. CRIMP TOOL AND CRIMP CONDITIONS, CRIMP HEIGHT etc., SHALL BE SPECIFIED BY THE CABLE USED.
4. PLATING
   CONTACT AREA : GOLD PLATING 0.2μm MIN.
   OVER NICKEL-PALLADIUM ALLOY PLATING 1μm MIN.
   UNDER PLATING : NICKEL PLATING 1μm MIN.

NO.	MATERIAL	FINISH , REMARKS	NO.	MATERIAL	FINISH , REMARKS
1	PHOSPHOR BRONZE	4	2	CARD-BOARD	

UNITS	SCALE	COUNT	DESCRIPTION OF REVISIONS	DESIGNED	CHECKED	DATE
mm	5 : 1					

HIROSE ELECTRIC CO., LTD.

APPROVED	: RI. TAKAYASU	12. 03. 23	DRAWING NO.	EDC3-027837-03
CHECKED	: YH. ENAMI	12. 03. 23	PART NO.	QR/P8-SC-221(15)
DESIGNED	: TS. ITO	12. 03. 22	CODE NO.	CL221-0174-9-15
DRAWN	: TS. ITO	12. 03. 22		1/1

FORM HC0011-5-7